TYPE WP3

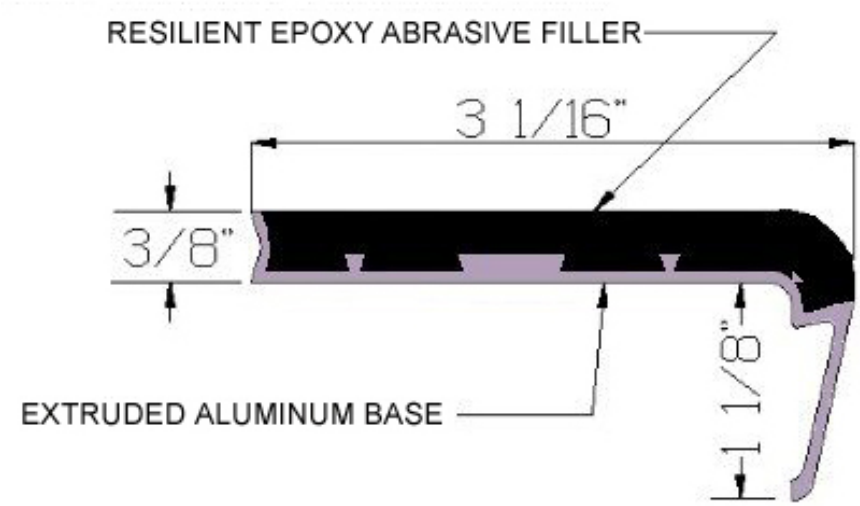

WOOSTER PRODUCTS INC.

http://www.woosterproducts.com

Max length in one section is 10'0"
Lengths over max will be made in equal sections

JOB NAME:		PAGE: OF	LENGTH	QTY	COLOR	FASTENERS
CUSTOMER:		NOTES:				
PO#						
ARCHITECT:						
COMPANY:						
CONTACT:						
ADDRESS:						
CITY,ST,ZIP						
PHONE:						
FAX:						